Loading Arm
910115
Operating Manual

Racine Railroad Products ▪ 1955 Norwood Court ▪ Mount Pleasant, WI 53403
Phone: (262) 637-9681 ▪ Fax: (262) 637-9069
Email: custserv@racinerailroad.com ▪ www.racinerailroad.com

Loading Arm

910115

Record of Changes

Rev No.	Date	Description of Changes
Rev 1	4.2007	Initial release.
Rev 2	10.2019	Branding update, new format, updated parts list
Rev 2.1	3.2023	Add environmental section, add hose, and recommended hydraulic fluids, Add PPE section
Rev 2.2	9.2023	Update Technical Support & Service information

Table of Contents

This page was intentionally left blank.

Section 1: Overview and Safety

Loading Arm Overview

Racine Railroad Products designs and manufactures equipment primarily for the repair and new construction of rail and railroad tie track maintenance.

The Loading Arm is used on rail already fixed to ties. It allows a load to be applied to the rail to assure proper distance between the rails when under pressure. The loading arm can also be used as an Assist Arm.

The Assist Arm is designed to quickly position the rail for fastening to the tie. It is often used on curves to maintain the proper distance between rails.

The arms can be adjusted to different lengths to accommodate different rail positions. Isolated ends allow for use near crossing and switches. The arms feature a rotary control valve for operating in a pushing or pulling function.

Do not use this machine for other than its intended purpose.

Please read these instructions when using this tool, which can only be used for the specified purpose. This instruction manual should be kept throughout the life of the tool.

The operator of this tool should:

- Have access to this operation instruction.
- Read and understand this operation instruction.

Note: Information in this document is subject to change without notice.

Environmental Protection

Comply with relevant national waste disposal laws and regulations. Waste electronic devices cannot be treated as household waste.

Equipment, accessories, and packaging shall be recyclable.

Do not throw the discarded equipment in trash cans.

Safety Information

For safe installation and operation of this equipment, carefully read and understand the contents of this manual. Improper operation, handling, or maintenance can result in equipment damage and personal injury.

Only trained and authorized personnel should be allowed to operate this machine. In addition, all personnel at the worksite should be aware of the safety concerns and their individual responsibilities prior to working this machine.

Please read and comply with all the safety precautions in this manual ***before*** operating this machine. Your safety is at risk.

Safety Terms

DANGER **DANGER indicates a hazardous operating procedure, practice, or condition. If the hazardous situation is not avoided death or serious injury will occur.**

WARNING **WARNING indicates a hazardous operating procedure, practice, or condition. If the hazardous situation is not avoided death or serious injury could occur.**

CAUTION **CAUTION indicates a potentially hazardous operating procedure, practice, or condition. If the hazardous situation is not moderate or minor injury could occur.**

Machine Use and Safety Precautions

WARNING **Failure to follow safety precautions when operating this equipment can result in serious injury or death to the operator or other persons in the area.**
Observe the following precautions whenever you are operating, working on or near this equipment.

Do not use this machine for other than its intended purpose.

Do not make any modifications without authorization or written approval from Racine Railroad Products. Replace all Racine Railroad Products and OEM parts with genuine Racine Railroad Products and OEM parts. Using non-OEM parts may compromise the safety of the machine.

Do not wear loose clothing, jewelry, radio belts, etc., when operating, working on or near this equipment. They can be caught in moving parts and may result in severe injury.

Always wear appropriate personal protective clothing when operating this equipment: e.g., orange safety vest, hard hat, safety glasses with side shields, hearing protection, steel-toed safety boots, leather gloves, dust respirator, etc.

Always lift heavy objects with the knees and legs, not the arms and back.

Always keep hands, arms, feet, head, clothing, etc., out of the operating area and away from all rotating or moving components when operating, working on or near this machine.

Always make sure that all guards, covers, belts, hoses, and operating components are in good working order and that all controls are in the appropriate position before starting the engine.

Always make sure that all safety equipment installed properly and are in good working order. Do not operate the machine until unsafe conditions have been corrected.

Always operate in a well-ventilated area and make sure that the air filters, air filter covers, and muffler are in good condition.

Always keep the machine clean and free of debris. Operate the machine in a safe and responsible manner. Exercise caution when fueling, working on or near rotating or moving components, hot components, and fuel systems. Be aware of potential fire hazards and prevent sparks, exhaust, etc., from starting fires on the machine and/or work area.

Always comply with all instructions provided on any decals or placards installed on the machine and with any relevant amplifying information provided in this manual or other general operating procedures.

Always disconnect the power source and make sure that all controls are in a safe position and install all appropriate locking and safety devices before doing any of the following:

- Lubricating
- Adjusting
- Installing Tooling
- Making Repairs
- Performing Service

Section 2: Specifications and Installation

Specifications

Length .....66.00-78.00 in [167.6-191.1 cm]

Width .....4.75 in [12.0 cm]

Height.....9.00 in [22.8 cm]

Weight .....38.0-lbs [17.2 kg]

Max push.....6.13 tons [5561 kg]

Max pull.....5.15 tons [4675 kg]

Installation

Unpacking Instructions

Upon receiving your Loader Arm**,** promptly remove it from the shipping container. Always keep the top side of container up. Inspect unit for damage which may have incurred during shipping and report it to carrier for claim.

Testing

1. Using the pump, extend the arm completely.
2. The loading arm is equipped with a pressure gauge.
3. Pump the pressure up to 2500 psi on this model for testing.
4. Return the arm to the fully retracted position.

   If the tool fails to function properly see the trouble shooting section of this manual.

Section 3: Tool Operation

Personal Protective Equipment

Before operating this machine, make sure that all general safety precautions are observed, and that proper personal protective clothing is worn as described below.

At a minimum, operators should wear the following Personal Protective Equipment:

1. Safety Glasses
2. Hearing Protection
3. Hard Hat
4. High Visibility Safety Vest
5. Leather Work Gloves
6. Steel Toed Safety Shoes

WARNING **Never get fingers or other extremities under or between the rails being adjusted. Failure to follow these instructions may lead to severe personal injury.**

Note: The loading arm has a psi to lbs of force conversion chart located next to the system pressure gauge. The gauge only reads pressure in the push direction not in the pull direction.

Before Operating

Check the hydraulic fluid level in the reservoir.

Fully retract the arm before placing between the rails.

Loading Arm

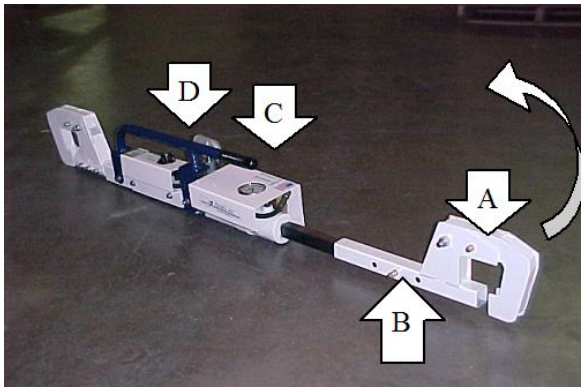

1. Position the loading arm between the rails being adjusted.

   The arm should be in the fully retracted position to assure maximum travel when pushing the rail apart.
2. Open the clamp ends located at each end of the arm. (Arrow A.)
3. Adjust the length of the arm by pinning the arm extension in the hole closest to fitting between the rail without going over. (Arrow B.)

   You may need to extend the arm using the pump to position the clamping mechanism over the rail properly.
4. Close the clamping arm and insert the pin at each end or the tool.
5. Remove the jack handle from the storage position inside the transport handle. (Arrow C.)
6. Insert the handle into the receiver for the pump valve. (Arrow D.)

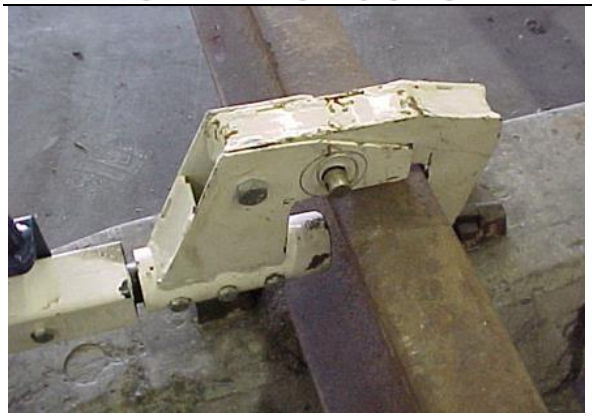

Proper Positioning on the Rail

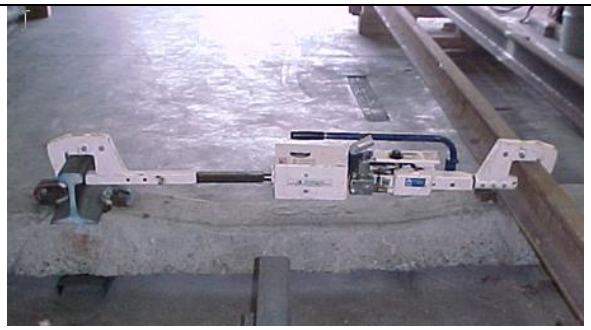

Proper Positioning on the Rail

7. Position the control valve into the required position and pump the valve to position the rail as needed. (Arrow F.)

   If operating the loading arm, continue pumping until the pressure gauge reaches the force required for measuring the rail movement.

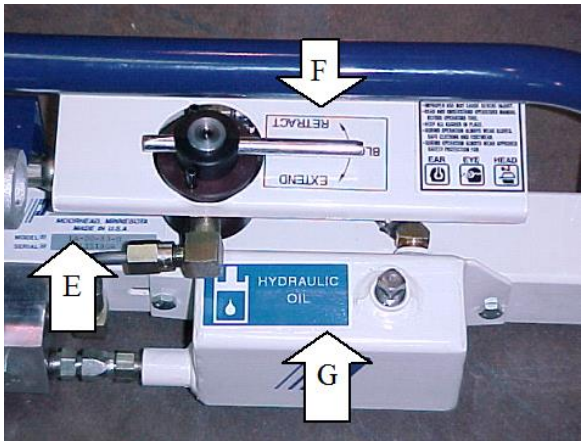

Removing Arm

1. To remove the arm from the rail, open the clamping ends.

   If the rail was pulled, extend the arm until the clamp ends will open freely.
2. Retract the arm to the fully retracted position.
3. Close the end clamps.
4. Insert the pins to prevent them from being lost.

Assist Arm

1. Position the assist arm between the rails.
2. Open the clamping end and set it over the fixed rail.
3. Close the clamp and pin it in place. Make sure the arm is fully retracted.
4. Remove the shoe from the end of the arm and position it under the rail.
5. It may be necessary to crib out under the rail if there is not enough room for the shoe.
6. Extend the arm until a set of holes in the arm align with a set of holes in the shoe.
7. Insert the connector pin. (See images below for proper position on the rail.)

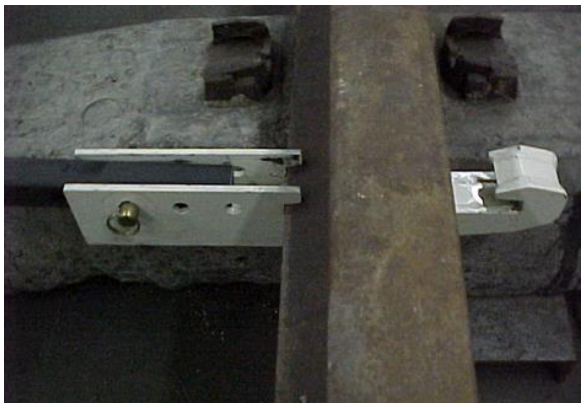

Assist Arm

1. Remove the jack handle from the storage position inside the transport handle. (Arrow C.)
2. Insert the handle into the receiver for the pump valve. (Arrow D.)
3. Position the control valve into the required position and pump the valve to position the rail as needed. (Arrow F.)

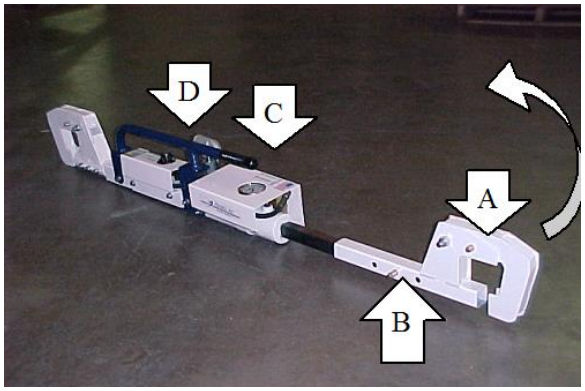

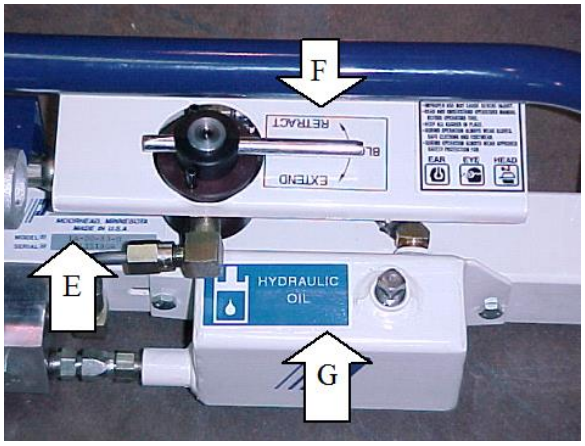

Removing the Assist Arm

1. To remove the assist arm from the rail, relieve the pressure using the jacking system to move the arm until it set loosely on the rail.
2. Remove the pin connecting the shoe to the arm.
3. Open the clamping end and lift the main unit out of the work area.
4. Slide the shoe out from under the rail and connect it to the assist arm.
5. Fully retract the arm to make the unit as compact as possible.

Storage Preparation

The tool should be stored in a cool, dry environment which is not subjected to rapid temperature changes.

1. Fully retract the arm and insert all pins.
2. Pin the adjustable portion of the arm at the shortest overall position to conserve space.
3. Insert the jack handle into the carrying handle.
4. Position the control valve in the blocked position.

Hose Requirements

It is not often necessary or advisable to use long hoses. All hoses must have an oil resistant inner surface and an abrasion resistant outer surface. Each hose must have male pipe ends for most application.

Longer hoses can be used when necessary but can affect the operation of the tool due to resistance in the hose.

If small diameter or long hoses are used, or if restrictive fittings are connected to the supply and return ports, the pressure required to push the fluid through the system and back to the tank will be higher. This will reduce tool power.

Important: Oil should always flow from the male coupler through the female coupler.

Note: The pressure increases in uncoupled hoses left in the sun. This may make them difficult for them to connect. When possible after use, connect the free ends of the operating hoses together.

Hose Types

Hydraulic hose types authorized for use with the tool are:

1. **Labeled and certified non-conductive**.
   - This is the only hose authorized for use near electrical conductors.
   - Constructed of thermoplastic or synthetic rubber inner tube, synthetic fiber braid reinforcement, and weather resistant thermoplastic or synthetic rubber cover.
2. **Wire braided** (conductive)
   - This hose is conductive and must ***never*** be used near electrical conductors.
   - Constructed of synthetic rubber inner tube, single or double wire braid reinforcement, and weather resistant synthetic rubber cover
3. **Fiber braided** (not certified or labeled non-conductive)
   - This hose is conductive and must ***never*** be used near electrical conductors.
   - Constructed of thermoplastic or synthetic rubber inner tube, synthetic fiber braid reinforcement, and weather resistant thermoplastic or synthetic rubber cover.

The rated working pressure of the hydraulic hose must be at least 175 bar (2500 psi).

Hydraulic Hose Recommendation

Hydraulic Hose Recommendation								
Flow Per Circuit		**Length Each Hose**		**Use**	**Inside Diameter**		**SAE Spec Hose (Wire Braid)**	**SAE Spec Hose (Fiber Braid)**
GPM	LPM	Feet	Meter		Inch	MM		
5 to 8	19 to 30	To 50	To 15	Both	1/2	13	SAE 100R1-8	100R7-8
5 to 8	19 to 30	51 to 100	15 to 30	Both	5/8	16	SAE 100R2-10	SAE 100R8-10
5 to 8	19 to 30	100 to 300	30 to 90	Pressure Return	5/8 3/4	16 19	SAE 100R2-10 SAE 100R1-12	SAE 100R8-10 SAE 100R7-12
9 to 12	34 to 45	To 50	To 15	Both	5/8	16	SAE 100R2-10	SAE 100R8-10
9 v 12	34 to 45	51 to 100	15 to 30	Pressure Return	5/8 3/4	16 19	SAE 100R2-10 SAE 100R3-12	SAE 100R8-10 SAE 100R7-12
9 to 12	24 to 45	100 to 200	30 to 60	Pressure Return	3/4 1	19 25.4	SAE 100R2-12 SAE 100R1-16	SAE 100R8-12 SAE100R7-16

The rated working pressure of the hydraulic hose must be at least 2500 psi / 173 bar.

Hydraulic Fluid Recommendation

Inspect hoses for cuts, crushing, leaks, or abrasion, which may be a safety hazard or reduce fluid flows.

The following fluids work well over a wide temperature range at startup, allow moisture to settle out, and resist biological growth in cool operating hydraulic circuits.

Others that meet or exceeds the specifications of these fluids may also be used.

Type	Hydraulic fluid
Amsoil	AWH ISO 32
Chevron	Rando HD Premium Oil MV ISO VG 32 Rando HDZ ISO 32
Gulf	Harmony AW ISO Multi-Grade 32
Mobil	DTE Oil Excel 32
Schaeffer	Dilex Supreme Hydraulic Fluid w/ Dynavis ISO 46.
Shell	Shell Tellus S2 VX 32
Sunoco	Sunvis 1032 HVI Hydraulic Oil

Tool Connecting Procedures

1. Stop the engine before connecting the tool and or hoses to the power unit, and when switching hoses or tools.
2. Turn the hydraulic on/off valve to the off position before starting the engine.

   Make sure all hoses are connected for correct flow direction to and from the tool being used.

   When routing hose in the work area, position them where personnel will not be at risk of tripping over them where vehicles can run over the hoses. Do not lay hose over sharp objects.

WARNING **Pressurized fluid escaping from a damaged hose can penetrate the skin and be injected in the body causing injury or death.**

Do not pull on hoses to drag the power unit or tool.

Connecting Hoses

1. Wipe quick couplers with a clean lint free cloth before connecting them.
2. Depressurize the system.
3. Allow system and hydraulic fluid to cool if too hot to handle.
4. Securely connect the return (tank “R”) hose from the power source to the tool.
5. Securely connect the supply (pressure “P”) hose from the power source to the tool.

   It is recommended that you connect the return hoses first and disconnect last to minimize or avoid trapping pressure within the tool.

   When connecting the quick couplers, the flow should run from male coupler to the female coupler. The female coupler on the tool is the inlet. Quick couplers are marked with a flow direction arrow.

WARNING **Pressurized fluid escaping from a damaged hose can penetrate the skin and be injected in the body causing injury or death.**

Do not pull on hoses to drag the power unit or tool.

Note: When possible, connect the free ends of uncoupled hoses to prevent build up in the hoses. The sun can also increase pressure in the hoses and make connecting them difficult.

Disconnecting Hoses

1. Stop the hydraulic power source.
2. Depressurize the system.
3. Allow system and hydraulic fluid to cool.
4. Disconnect the supply (pressure) hose from the power source (pressure port) from the tool (IN port).
5. Disconnect the return (tank) hose to the hydraulic power source (return port) from the tool (OUT port).
6. To prevent contamination, always install dust caps over the hydraulic ports of the tool when disconnected.

Section 4: Maintenance

It is highly recommended to practice regular check-ups and maintenance in accordance with the usage frequency to keep your tool in better condition and reduces total running costs.

Wipe all external surfaces after each use with a clean, lint free cloth to remove surface contaminants from the tool.

If the arm fails to extend completely or fails to build pressure, check the fluid level in the hydraulic oil reservoir.

1. Retract the arm completely.
2. Remove the fill plug and fill the reservoir to the bottom of the neck in the tank.
3. Insert the plug.

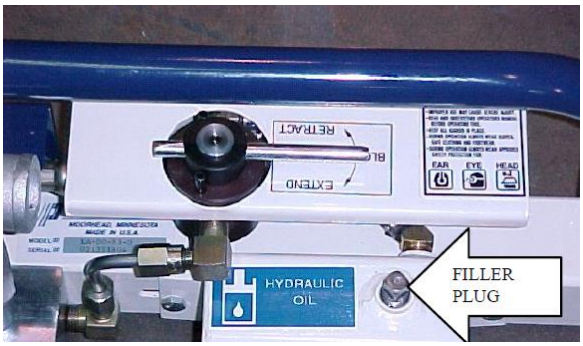

Troubleshooting

The following chart can be used as a guide to correct any problem you may experience with the tool.

Problem	Cause	Resolution
Arm will not extend completely.	Control valve in wrong position.	Check control valve position.
	Low fluid level.	Check fluid level in hydraulic oil reservoir.
Arm will not extend or retract, and pumps hard.	Control valve in *blocked* position.	Check control valve position.
Loading arm will not build pressure.	Control valve not in extend position.	Set valve in extend position if pushing rail apart.
	Low fluid level.	Check fluid level in hydraulic oil reservoir.

Section 5: Parts and Service Support

Telephone and web-based technical support is available for current production models through our Customer Service Department. Service Manuals and limited technical support may be available for models that are no longer in production.

Telephone and E-mail Technical Support

Telephone and e-mail technical support is available on normal U.S. business days from 8:00 AM to 5:00 PM U.S. Central Time Zone (GMT +6 (+5 Daylight Savings Time)).

Phone: (262) 637-9681
Email: custserv@racinerailroad.com

Racine Railroad Products
1955 Norwood Court
Mount Pleasant, WI 53403

Non-Warranty Technical Support

Depending upon the circumstances and availability of technical service personnel, we may provide technical assistance and/or field service support, *at the customer's expense*, to assist in the correction of non-warranty related problems. Contact our Customer Service Department to coordinate Non-Warranty Technical or Field Service Support.

Warranty Support Technical Support

Depending upon the circumstances and availability of technical service personnel, we may provide technical assistance and/or field service support, *at no charge to the customer*, to assist in the correction of warranty related problems. Contact our Customer Service Department to coordinate Warranty Technical or Field Service Support.

Warranty Parts Claims

Material claimed to be defective must be returned to our factory for evaluation. Defective materials will be replaced, or your account will be credited if replacement materials have already been purchased. Please contact our Customer Service Department at the address provided below if you have any questions or problems.

Warranty Service Support

Depending upon the circumstances and availability of technical service personnel, we may provide technical assistance and/or field service support, at no charge to the customer, to assist in the correction of warranty related problems. Contact our Customer Service Department at the address provided above to coordinate Warranty Service Support.

Loading Arm Drawings and Parts List

Service Parts List

NO.	QTY	DESCRIPTION	PART NO.
1	1	PIN	466442
2	1	REST, FOOT	466443
3	1	FOOT, COMPLETE RAIL	471065
4	1	GAUGE	472566
5	1	CAM, ARM	472567
6	1	GUARD, VALVE	472568
7	1	CLAMP, ADJACENT END	472569

Assist Arm Drawing

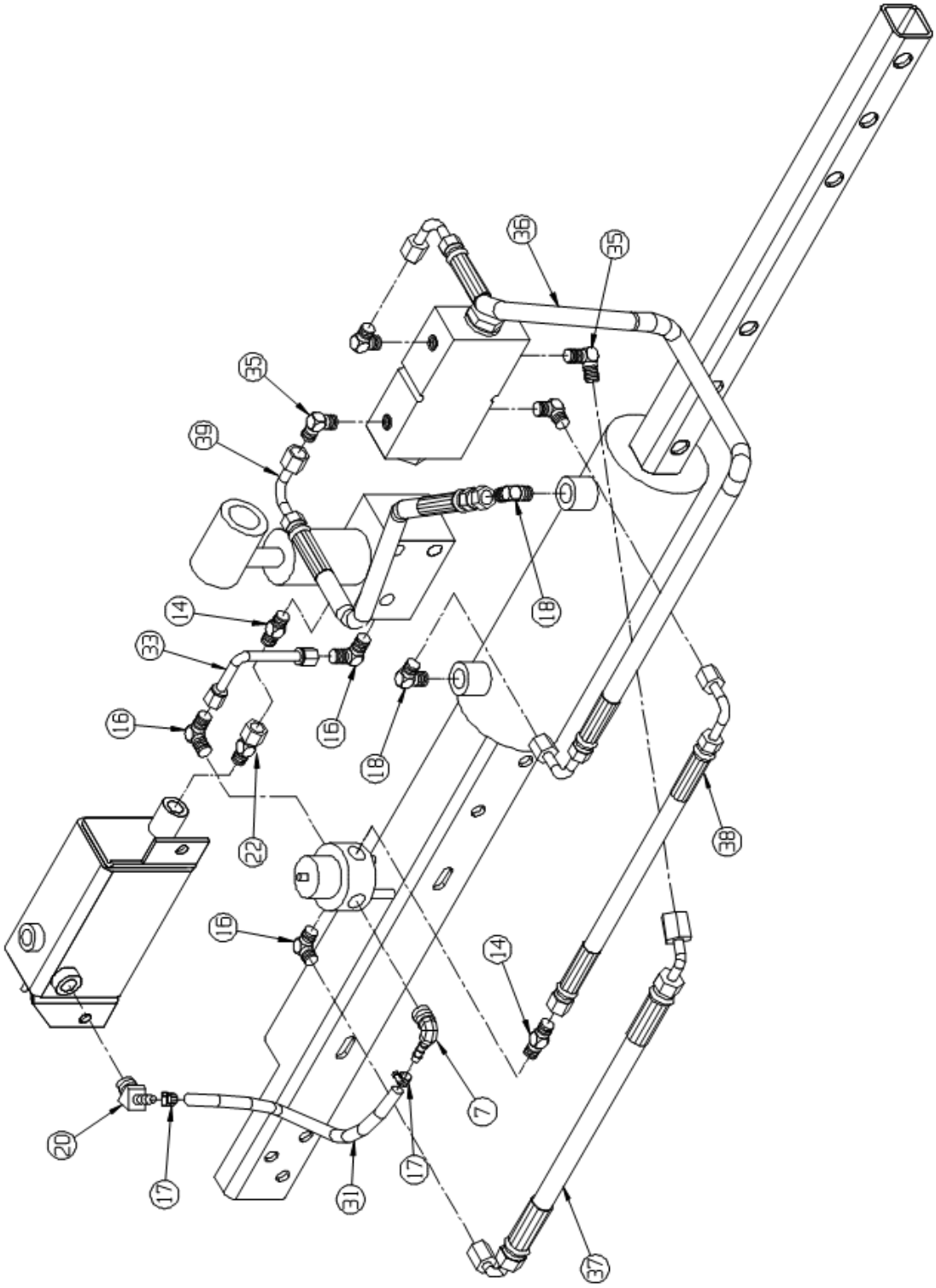

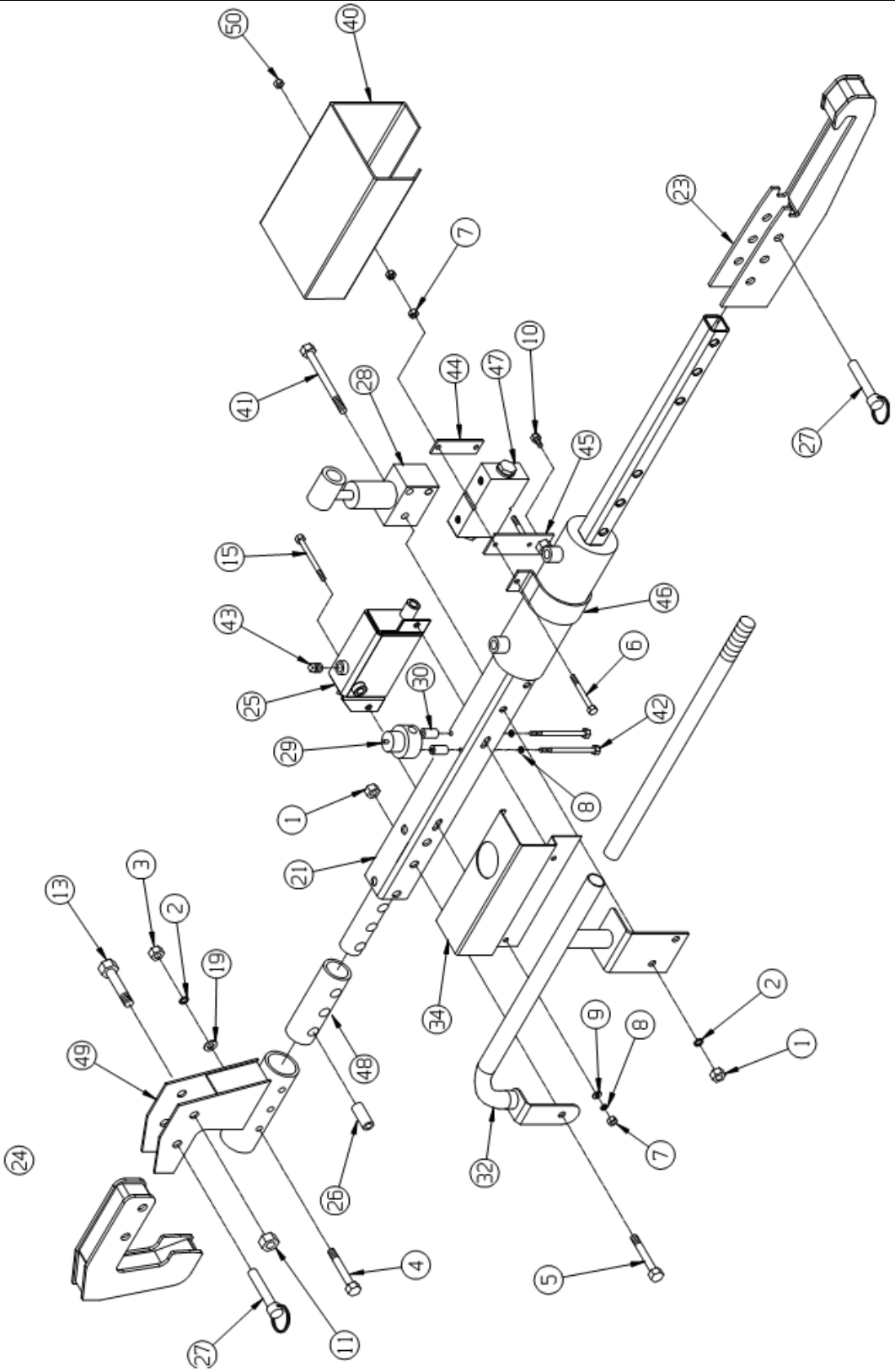
50
40
7
23
41
28
44
47
10
45
27
15
43
46
6
25
30
42
29
8
1
21
13
3
2
19
34
9
8
2
1
49
48
7
24
26
32
4
5
27
11

Assist Arm Parts List

Item No.	Description	Qty
1	NUT, 3/8	3
2	3/8 LOCK WASHER	5
3	NUT, 3/8	3
4	BOLT, 3/8 NC X 2 ½ HH	3
5	BOLT, 3/8 NC X 2 ¾ HH	1
6	BOLT, ¼ NC X 2 ¼ HH	1
7	¼ NYLOCK NUT	4
8	¼ LOCK WASHER	2
9	¼ WASHER FLAT	1
10	BOLT, ¼ NC X ½ HH	1
11	NUT, ½	1
12	FITTING	1
13	BOLT ½ NC X 2 ¾ HH	2
14	FITTING	2
15	BOLT, ¼ NC X 2 ½ HH	2
16	FITTING	3
17	CLAMP HOSE	2
18	FITTING	2
19	3/8 FLAT WASHER	3
20	FITTING	1
21	FRAME COMPLETE	1
22	FITTING	1
23	FOOT RAIL COMPLETE	1

Item No.	Description	Qty
24	CLAMP ARM	1
25	TANK HYD	1
26	BUSHING PLASTIC	1
27	PIN	4
28	PUMP HAND	1
29	BALVE HYD	1
30	SPACER	2
31	HOSE HYD	1
32	HANDLE COMPLETE	1
33	TUBE SHOURT	1
34	HOSE HYD	1
35	FITTING 90°	4
36	HOSE HYD	1
37	HOSE HYD	1
38	HOSE HYD	1
39	HOSE HYD	1
40	GUARD CHECK	1
41	BOLT	2
42	BOLT	2
43	PLUG/CAP	
44	PLATE RETAINING	1
45	MOUNT PLATE (CHECK)	1
46	STRAP	1
47	VALVE CHECK HYD	1
48	INSULATOR LARGE	1
49	FOOT RAIL INSULATED	1
50	¼ NYLOCK NUT	2

Loading Arm Drawing

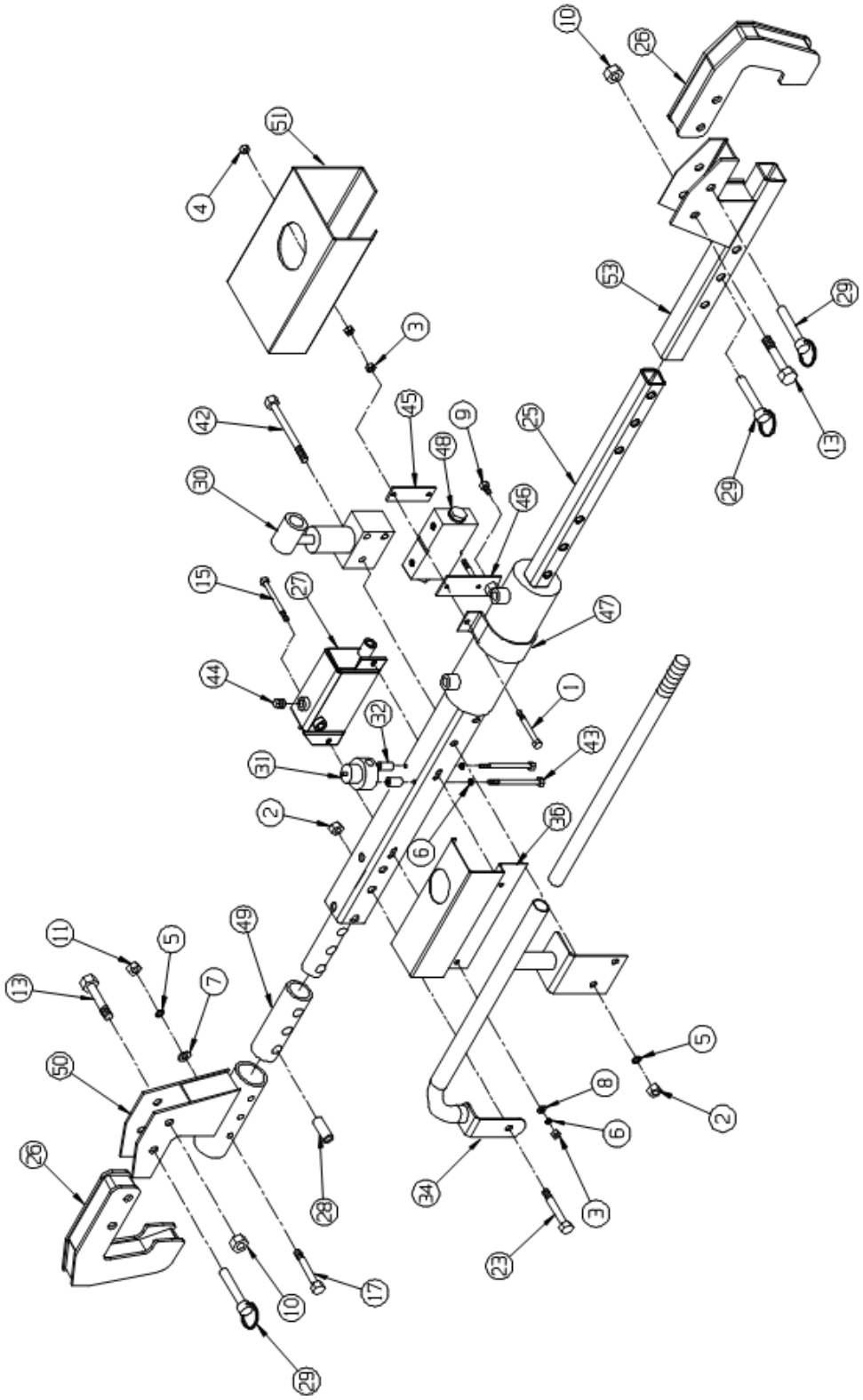

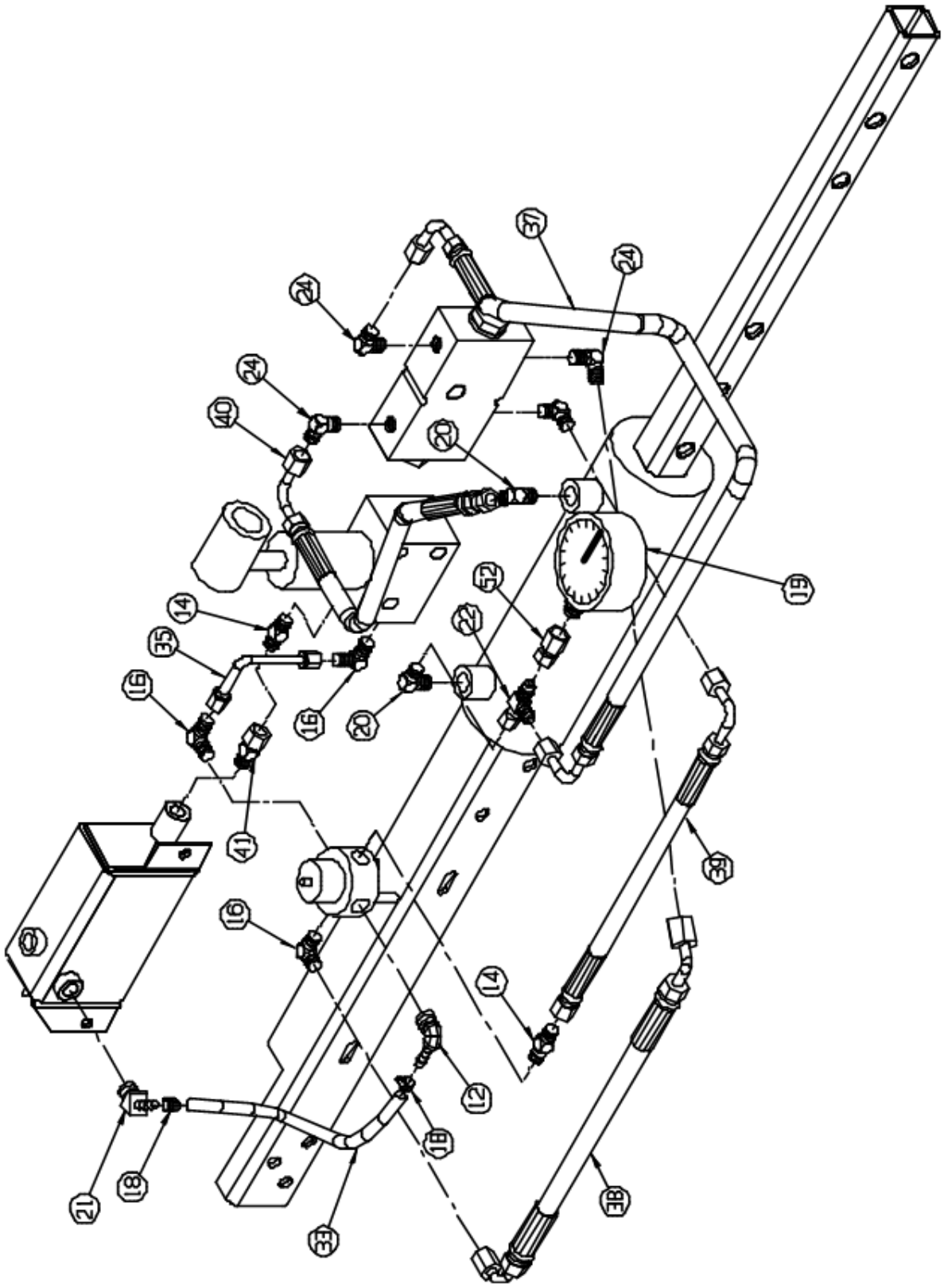
37
24
24
24
40
28
19
52
22
14
35
16
16
20
41
39
16
14
12
18
21
18
33
38

Loading Arm Parts List

Item No.	Description	Qty
1	BOLT, ¼ NC X 2 ¼ HH	1
2	NUT, 38 NC HH	3
3	NUT, ¼ NC HH	4
4	¼ NYLOCK	2
5	LOCK WASHER 3/8	5
6	LOCK WASHER ¼	4
7	3/8 FLAT WASHER	3
8	WASHER, ¼ FLAT PLATED	2
9	BOLT, ¼ NC X ½ HH`	1
10	NUT ½ NC HH SELF LOCKING	2
11	NUT 3/8 NC NYLOCK	3
12	NUT, ¼ NC HH	1
13	BOLT ½ NC X 2 ¾ HH	2
14	FITTING	2
15	BOLT ¼ NC X 2 ½ HH	2
16	FITTING	3
17	BOLT 3/8 NC X 2 ½ HH	3
18	CLAMP, HOSE	2
19	GAUGE	1
20	FITTING	2
21	FITTING	1
23	BOLT 3/8 NC X 2 ¾ HH	1
24	FITTING 90°	4
25	FRAME COMPLETE	1
26	CAM ARM	2
27	TANK HYDRAULIC	1
28	BUSHING PLASTIC	3
29	PIN	5

Item No.	Description	Qty
30	PUMP HAND	1
31	VALVE HYDRAULIC	1
32	SPACER	2
33	HOSE HYDRAULIC	1
34	HANDLE COMPLETE	1
35	TUBE SHORT	1
36	GUARD VALVE	1
37	HOSE HYDRAULIC	1
38	HOSE HYDRAUILIC	1
39	HOSE HYDRAULIC	1
40	HOSE HYDRAULIC	1
41	FITTING HYDRAULIC	1
42	BOLT	2
43	BOLT	2
44	PLUG/CAP	1
45	PLATE RETAINING	1
46	HANDLE COMPLETE	1
47	STRAP	1
48	VALVE CHECK HYDRAULIC	1
49	INSOLATOR LARGE	1
50	END INSULATED	1
51	GUARD VALVE	1
52	FITTING HYDRAULIC	1
53	CLAMP ADJ. END	1

Section 6: Warranty Terms and Conditions

Warranty Period

Each new machine and new parts of our manufacture are warranted against defects in material and workmanship for one year from the date of shipment from our factory.

When contacting customer service for factory parts, service or warranty support please provide the:

- Racine Railroad Products Model
- Serial Number
- Any locally assigned identification

Vendor Parts Warranty Period

Other equipment and parts used, but not manufactured by Racine Railroad Products, Inc., are covered directly by the manufacturer's warranty for their products.

Warranty Parts and Service

We will repair or replace, without charge, F.O.B. factory, Racine, Wisconsin, USA, any part Racine Railroad Products manufactures which is proven to be defective during the warranty period.

Material claimed defective must be returned, if requested, to the factory within 30 days from the date of the claim for replacement. Ordinary wear and tear, abuse, misuse, and neglect are not covered by this warranty. Depending upon the circumstances, we may provide technical assistance and/or technical service support, without charge, to assist in the correction of warranty related problems.

Non-Warranty Parts and Service

Material damaged through normal wear and tear, abuse, misuse and/or neglect are not covered by our warranty and should be ordered directly from Customer Service.

Note: Parts for models that are no longer in production may not be available.

Non-Warranty Parts Orders

When placing a parts order please provide the following information:

- Company Name and Billing Address
- Purchase Order Number and Issuing Authority
- Shipping Address
- Special Handling Instructions
- Contact Phone Number
- Machine Model and Serial Number
- Part Numbers and Quantities Being Ordered

Note: *Please use Racine Railroad Products part numbers when ordering parts.* Racine Railroad Products part numbers are shown in the parts lists and drawings of this manual and have only six (6) numbers.

Any part number with other than six numbers (e.g., contains alpha-numeric characters) is a Vendor Part Number and ***not*** a Racine Railroad Products part number